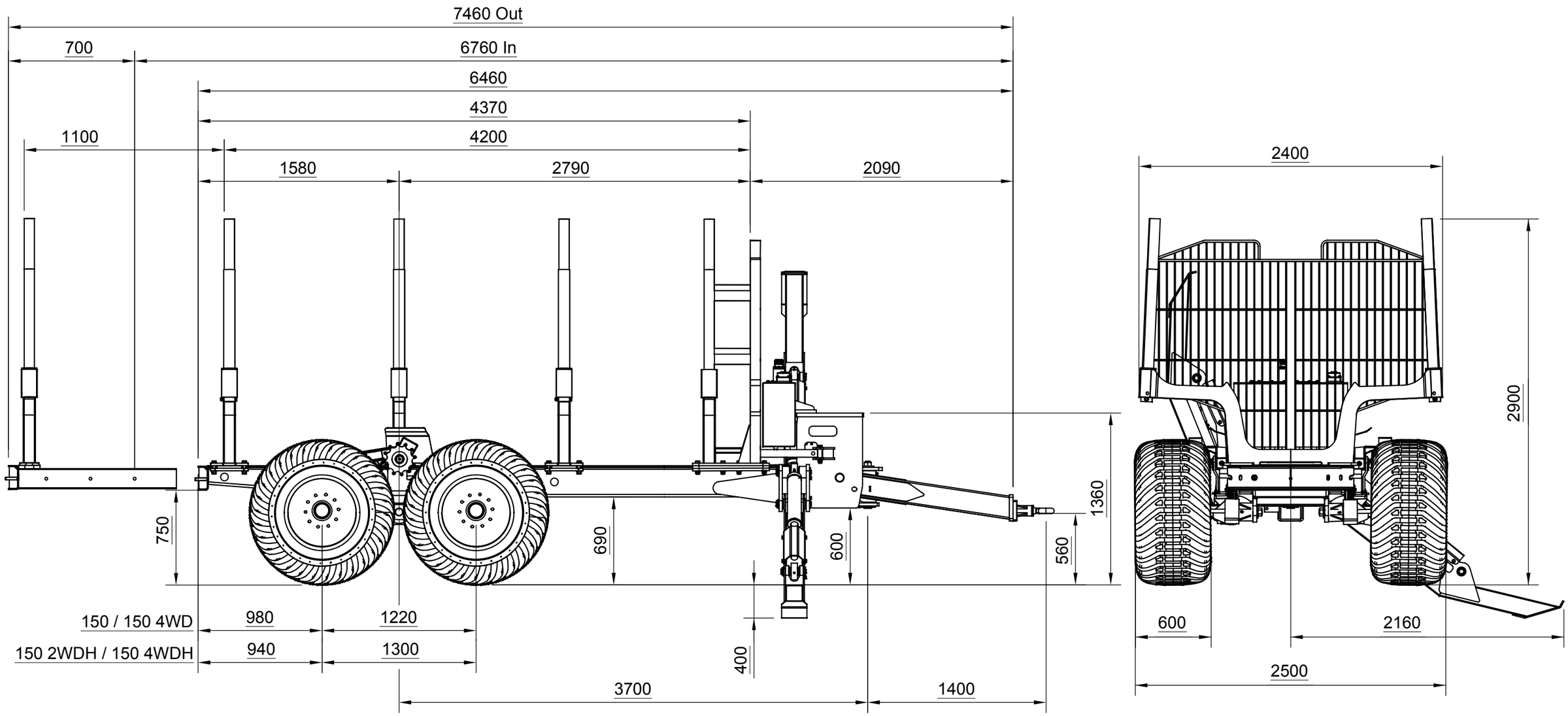
7460 Out
700
6760 In
6460
4370
1100
4200
1580
2790
2090
2400
2900
750
690
600
560
1360
150 / 150 4WD
980
1220
150 2WDH / 150 4WDH
940
1300
400
3700
1400
600
2160
2500